TTN (Thunder) Ultra-narrow Aluminum Series

10 Real Points IR Touch Screen

Specification

Supports Android , Windows XP/7/8/10 without any driver

26-85 inch

Windows 7 | Windows 8 | Windows 10 | ANDROID | Linux | Mac OS | Chrome

1.Overview

- TTN (Thunder) Ultra-narrow Aluminum Series are designed for large size display of high reaction speed multi-touch solutions，product performance is remarkable，support 10 real points without driver，and support multi-people touch interaction.
- The product uses aluminum frame，and provide “Universal accessory”，can be built-in or plug-in.

2. Features

- True multi-touch, writing fluency
- Support multiple operating systems without driver
- Aluminum frame，can be built-in or plug-in
- Free maintenance，long product life
- Fault-tolerant design, stable performance
- Dense tube design, high precision of touch
- Hardware self-test, easy to upgrade debugging
- Anti light&dust，anti violence& scrape

3.Application

Kiosk

Vending machine

Query

Games

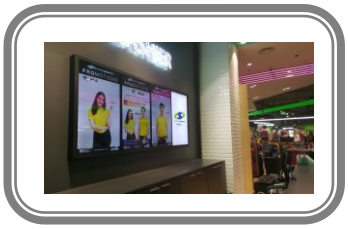

Exhibition

Finance

Education

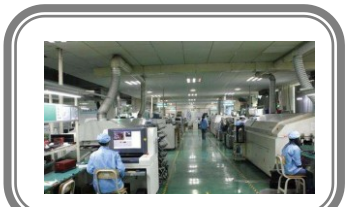

Industrial control

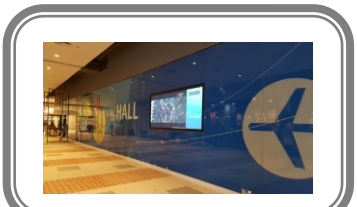

LED curtain wall

4. Specification

Standard Size		26" -85"
Border Width		19mm
Touch Points		maximum support 10 points
Thickness		11mm
Shell		Aluminum6063
Color		Black (wire drawing technology)
Cable Length		USB：1.7m
Waterproof Level		Non-waterproof
Certification		RoHS, CE, FCC
Glass	Thickness	3 mm，4mm，5mm (selection)
	Material	Standard：toughened glass (surface hardness 7H) ; Customized：AR，AG glass
	Luminousness	toughened glass≥86%，AR glass≥92%，AG glass≥80%

5.Electrical

Output Resolution		32767*32767
Touch Precision		2.8mm (Centre area 5.5mm)
The Smallest Touch Objects		>5mm
Touch Depth		<3mm
Output Type		Touch Coordinate Output
Calibrate		Not Require Recalibration (Can provide screen adjustment software, auxiliary calibration)
Response Speed		<15ms
Multi-points Recognition		More than 10mm between touch points
Consumption		<2W，Typical 1.2W (DC5V Power)
Plug and Play		Without any driver (USB Product)
Scanning Frequency		60Hz
Interface		USB2.0，HID (Plug and Play)
USB2.0	Terminal Type	A-type USB
	Communication Interface	USB-D+，USB-D-
	Transmission Speed	12Mbps
	Power Supply	USB
ESD		Contact discharge 4KV, air discharge 8KV
Supply Voltage		DC+5V±5%
Operating Current		<200mA

6.Mechanical

Touch Objects	Opacity object
Sensor	Infrared Ray
Working Life	Unlimited
Touch Pressure	Zero Pressure

7.Environmental

Temperature	Operating：-10℃~60℃
	Storage：-30℃~85℃
Humidity	Operating：10℃~90℃ RH，40℃
	Storage：10℃~90℃ RH，40℃

8.Software

Scan	Auto scan after power on
Event Detection	Touch start to the end trajectory detection
Upgraded	Upgraded with USB interface
Driver	Without any driver(USB Product)USB2.0；HID (Plug and Play)
Touch Events	Virtual Mouse(Drag,Left&Right Button)
	Android、Windows 7/8/10 Max Support 10points touch event
	Touch device (Win7/8/10/Mac OS zoom and rotation，multi-person interactive)
	Support single display touch, multi monitor touch, extended display touch
OS Support	Windows 7/8/10，Linux，Mac OS，Android
Technical Service	Customizable output protocol, output interface, and application，DLL
Technical Support	Windows,Android online diagnosis, upgrade,configuration;Other platform can be customized

9. Reliability

Project	Test Condition	Result
High-temperature Storage	60℃：not work 20 hours continuously, room temperature for 2 hours	Normal
Low-temperature Storage	-20℃：not work 20 hours continuously, room temperature for 2 hours	Normal
High and low temperature cycle	40℃：work 48 hours continuously，then -10℃ work 24 hours continuously	Normal
High humidity work	40℃，85%：work 24 hours continuously	Normal
USB plug test	Plug 2000 times in a row under different operating systems	Normal

10.Package

Product Accessories	Touch pen, manual, USB extension cable (selection), Universal accessory (selection)
Package	Carton (overall packaging , 5 pieces), Paper tube (dismantle packing)

11.Sketch Map

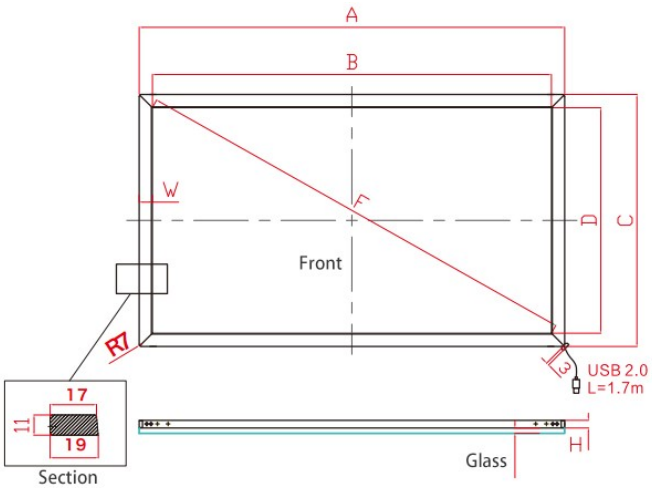

Size (")	TTN Aluminum frame touch screen size table							
	Ratio	Touch Area (mm)		Outline dimension （±1mm）		Thickness		Border width (mm)
		X（B）	Y（D）	Length (A)	Width (C)	Glass	Frame (±0.5mm)	
26	16 : 9	578	326	616	364	3	11	19
27	16 : 9	600	339	638	377	3	11	19
32	16 : 9	701	395	739	433	4	11	19
37	16 : 9	822	463	860	501	4	11	19
40	16 : 9	888	501	926	539	4	11	19
42	16 : 9	933	526	971	564	4	11	19
46	16 : 9	1021	575	1059	613	4	11	19
47	16 : 9	1042	587	1080	625	4	11	19
49	16 : 9	1077	607	1115	645	4	11	19
50	16 : 9	1098	619	1136	657	4	11	19
55	16 : 9	1213	684	1251	722	4	11	19
58	16 : 9	1272	723	1310	761	4	11	19
59.6	16 : 9	1320	742	1358	780	4	11	19
60	16 : 9	1333	751	1371	789	4	11	19
65	16 : 9	1432	807	1470	845	4	11	19
70	16 : 9	1553	875	1591	913	4	11	19
82	16 : 9	1809	1019	1847	1057	5	11	19
84	16 : 9	1864	1050	1902	1088	5	11	19

<PS : IR touch screen overall thickness = frame thickness + glass thickness +1mm double-sided adhesive >